TEDEG

TDG-EDP-DOX DC POWER DISTRIBUTION UNIT

DC Power Distribution Unit

+90 312 511 5000
info@tedegcompany.com
www.tedegcompany.com

General Features:

- Collects power from DC power sources on + and - busbars and distributes it to necessary systems.
- Converts 12 VDC power to 28 VDC 500 Watt via an integrated converter.
- Uses a thermostat to engage the fan system stepwise at temperatures of 30 °C and above for cooling.
- Produced to operate according to MIL-STD-810G Rain standard.
- Cable transitions for input and output are provided with IP67 PG type cable glands.
- The panel is specially manufactured from 5000 series aluminum.
- Paint configuration can be customized as per customer requirements.
- Military-grade cables of AWG type are used according to power needs.

DC Power Distribution Unit

System Features	
Input Count	**4 Units**
Types of Inputs	**Battery 1, Battery 2, Alternator, Battery Charger**
Busbar Type	• **(+) and (-) type 400 Ampere Busbar**
Cable Connector Transitions	• **IP67 Type PG Cable Gland suitable for cable diameter**
Output Fuse Type and Capacity	• **MIDI Type, 100 Amperes @28 VDC** • **MIDI Type, 60 Amperes @28 VDC** • **MIDI Type, 30 Amperes @28 VDC**
Spare Fuse Types and Capacity:	• **3 units, 30 Amperes MIDI Type** • **3 units, 60 Amperes MIDI Type** • **3 units, 100 Amperes MIDI Type** • **3 units, 200 Amperes MIDI Type**

System Features	
Cooling Type	2 Axial Fans (at Suction Part)
Hinge	Torque Type Hinge Available
Thermostat	Engages at 30 °C and above to operate cooling fans stepwise.
Sealing	• MIL-STD810G, Method 506.5, Procedure I (Waterproof) • Test Duration: 30 minutes
EMI/EMC Protection	• EMI gasket included
Operating Temperature	-32 to +52 °C
Battery Disconnect	Available
Weight	14 ± 2 KG
Emergency Stop Button	Available
Part Number TDG-EDP-DOX	X= • 0: Military Green Green 383, FED STD 595B 34094 (AYL) • 1: RAL 1002 Sand Yellow • 2: Earth Yellow, FED STD 595B 33245 (TSR) • 3: RAL6014 Yellow Olive

Operating Scenario	
Control Unit	• Turns on when Vehicle Battery exceeds 11.5 VDC or 21 VDC. • Turns off when Vehicle Battery drops below 11 VDC or 20.5 VDC.
Fans	• Active when the input contactor and DC/DC converter are active. • Stops when below 25 °C. • Starts working above 30 °C. • Works at 100% performance at 45 °C
12 VDC-28 VDC 500 W Converter	• Starts working above 12.5 VDC. • Stops below 12 VDC
Input Contactor	• Engages at 21.5 VDC. • Disengages below 21 VDC, disconnecting the batteries from the system and the load contactor. • Disengages when emergency stop is active
Load Contactor	• Disengages when emergency stop is active
Features	• Opening voltages of the Control Unit are non-adjustable. • All other values are adjustable. • There is a switch in the panel that bypasses the values

Dimensions

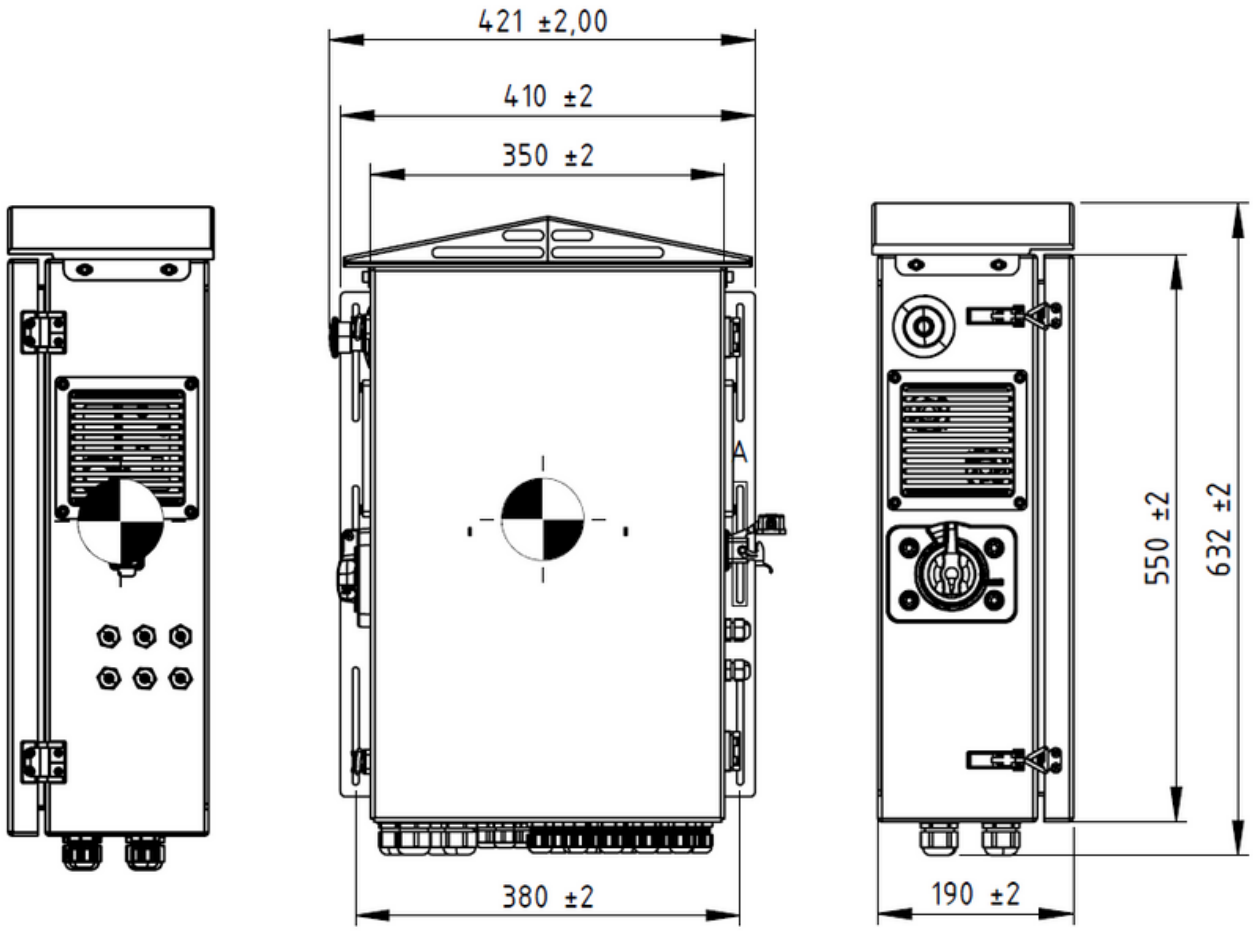

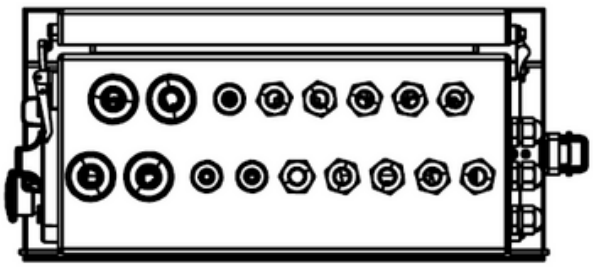

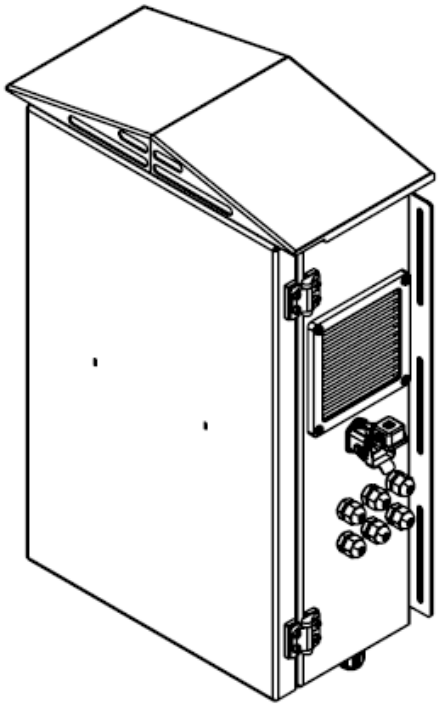

DC Power Distribution Unit