TEDEG

POWERGUARD AC-AC FREQUENCY CONVERTER TRANSFORMER SYSTEM

POWERGUARD

+90 312 511 50 00
info@tedegcompany.com
www.tedegcompany.com

POWERGUARD AC-AC FREQUENCY CONVERTER TRANSFORMER SYSTEM

Tedeg's Power Transformer and Frequency Inverter are engineered to fulfill the crucial demand for dependable and continuous energy supply, essential for contemporary defense systems.

This device functions as a sophisticated converter capable of receiving different electrical inputs and generating output in the specified formats: 115 VAC 400 Hz and 115 VAC 60 Hz. Moreover, through its power distribution unit feature, it provides tailored power solutions to numerous systems and subsystems by intelligently alternating among 7 distinct outputs.

Designed for utilization across sea, air, and land vehicles, this system distinguishes itself through exceptional performance and robustness. Its adherence to military benchmarks like MIL-STD-810F and MIL-STD-461E validates its resilience to rigorous environmental and EMC criteria. This offering caters to individuals seeking to fulfill operational dependability and performance standards, particularly within the defense sector.

POWERGUARD

+90 312 511 50 00 info@tedegcompany.com www.tedegcompany.com

Power Input Characteristics

- Input Voltage: 220-460 VAC 50 Hz

Characteristics of the Output

- 2 units of 115VAC 400Hz three-phase (delta),
- 3 units of 115VAC 60Hz three-phase (delta) circuits.
- Two 115VAC 60Hz single-phase units

Distribution of Power	Smart switching with 7 distinct output channels
Standards	MIL-STD-810F, MIL-STD-461E
Temperature range	-35°C to +65°C
Type of Connection	MIL-C-38999 connector
Enhancing energy efficiency.	>%90
Power Factor	Minimum 0.85 (line-to-neutral)
Distortion	Maximum 5%
Modulation Frequency	Maximum 4Hz.
Communication	RS-432
Screen Control Characteristics	OLED Display, Error Status, Alarm Status, Menu Navigation, Output-Specific On/Off Button
Blackout	Was.
Muted Mode	Was.

POWERGUARD

+90 312 511 50 00 info@tedegcompany.com www.tedegcompany.com

Military Condition Strength

Evaluation Category	Detail
Operation at Elevated Temperatures	It can function in temperatures exceeding 50°C.
High Temperature Tolerance	Suitable for hot climates in category A2, durable according to MIL-STD-810G CHG-1 Method 501.6 Procedure I.
Operation at Low Temperatures	It can function at -30°C.
Cold Resistance	Resilient in -30°C temperatures.
Humidity in Operation	Resistant to humidity-temperature cycling as per MIL-STD-810G CHG-1 507.6-7.
Resistance to Moisture	Resistant to moisture conditions in accordance with MIL-STD-810G CHG-1 507.6.
Rainfall Operations	Capable of functioning in rainy conditions according to MIL-STD-810G CHG-1 Method 506.6 Procedure II.
Waterproofing	Endures rain conditions according to MIL-STD-810G CHG-1 Method 506.6.
Vibration Resilience	• Vibration resistance conforms to MIL-STD-810G CHG-1 Method 514.7 Procedure I, Category 21, and Method 528.1 Procedure I. • Vibration resistance conforms to MIL-STD-810G CHG-1 Method 514.7 Procedure I, Category 8. • Vibration resistance conforms to MIL-STD-810G CHG-1 Method 514.7 Procedure I, Category 4. • Vibration resistance conforms to MIL-STD-810G CHG-1 Method 514.7 Procedure I, Category 4.
Sand and Dust	Resistant to sand and dust conditions as per MIL-STD-810G CHG-1 Method 510.6 Procedure I and II.
solar irradiance	Resistant to solar radiation per MIL-STD-810G CHG-1 Method 505.6 Procedure I.
EMI/EMC	It adheres to MIL-STD-461G and has successfully undergone electromagnetic compatibility and interference assessments.
Functional Shock	A 20g can withstand functional shock in 11 ms sawtooth operation.

POWERGUARD

Features of the Control Unit

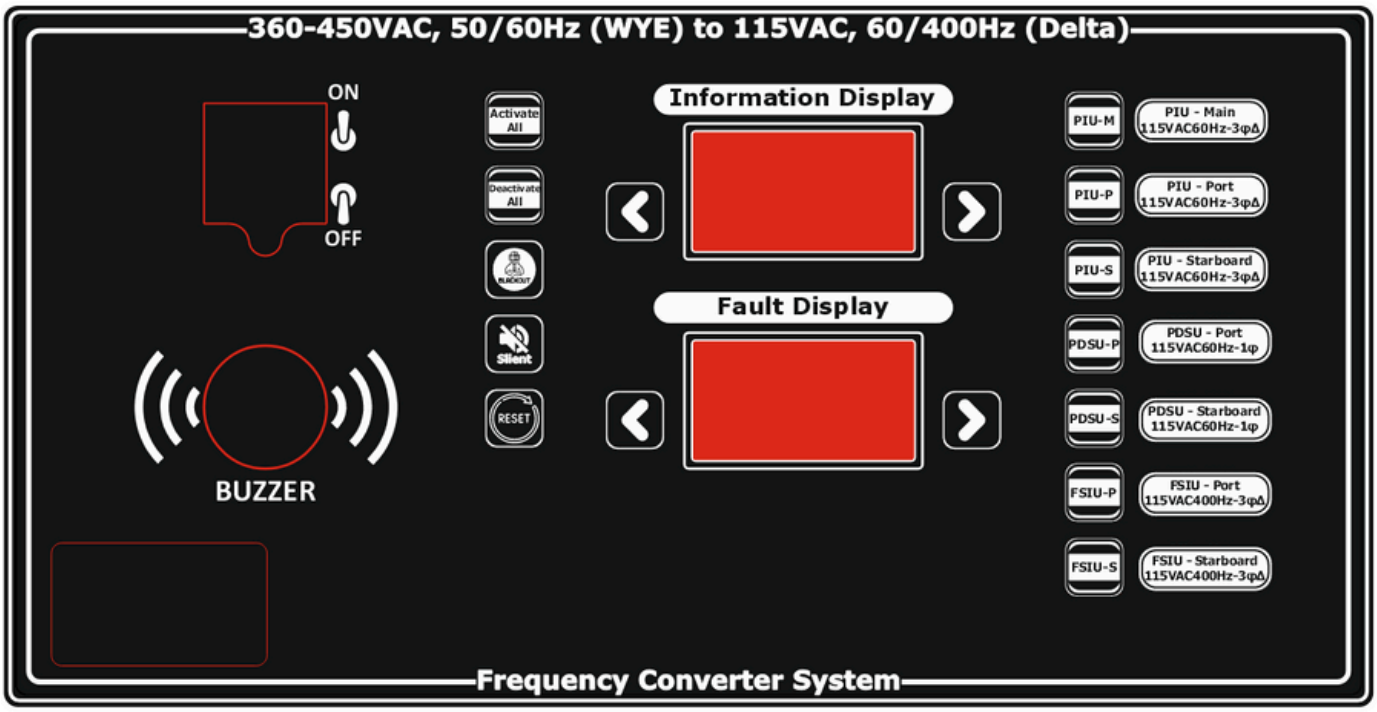

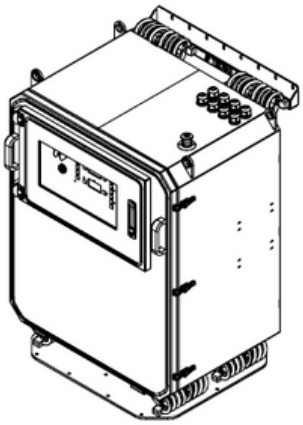

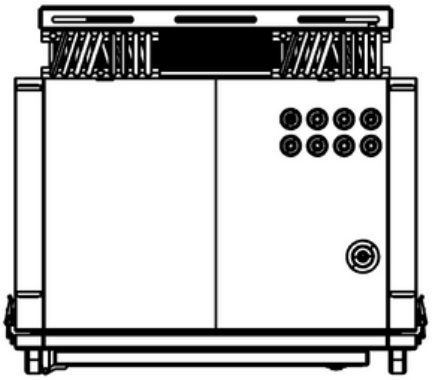

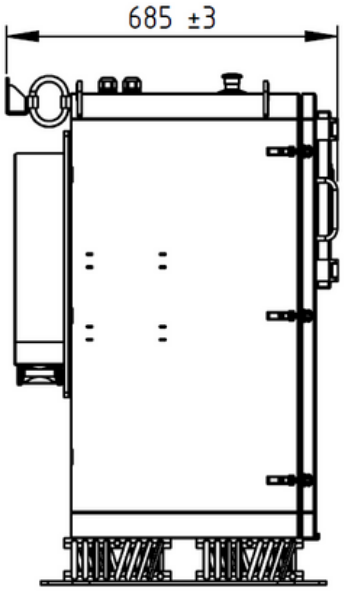

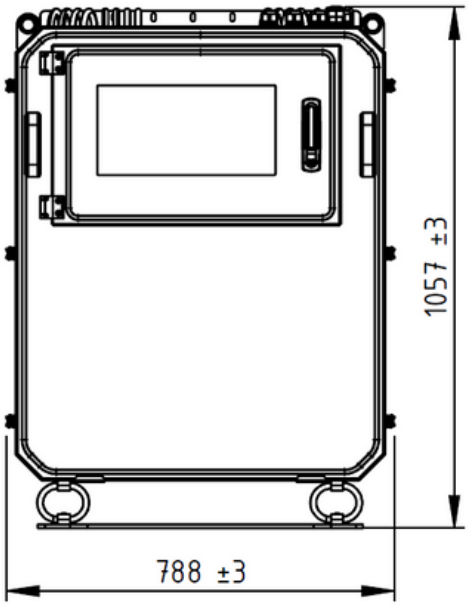

POWERGUARD